POZEMNÍ
STAVBY

Custom manufacturing of beams, girders and bracings

07 Čerčany

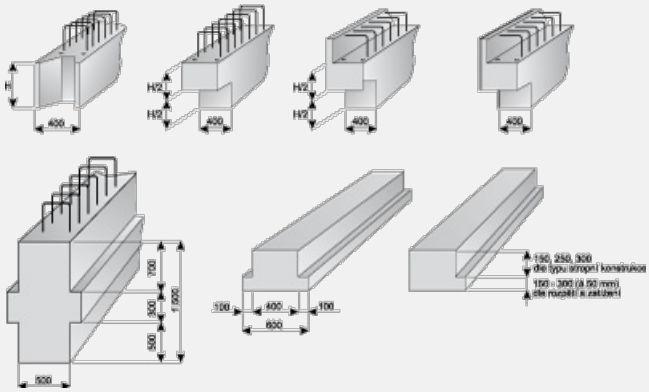

Trademark	Dimensions (cm)			Weight (kg)
	L	B	H	
ZV 012	max 2600 - 3000	max 100 - 120	max 120 - 220	max 32 000 - 70 000

Usage:

Bearing bar components that make, together with vertical elements, a base structure of the skeletal system. Component placing and shape can be freely accomodated to its required functionality. Face areas are made to fulfil demanding requirements for the final surface finish.